SRSZ(4101)Series

超小型信号继电器
Subminiature Signal Relay

1A/3A

特性 / FEATURES

- 5A触点切换能力
  5A switching capability
- UL绝缘等级: F级绝缘等级
  UL insulation system: Class F
- 具有密封型与防焊剂型两种封装形式
  Sealed and flux proofed types available
- 印制板式引出端
  Standard PCB layout

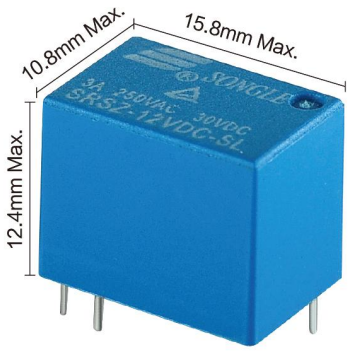

E167996 R50056114 RoHS Compliant

订购信息 / ORDERING INFORMATION

SRSZ-12VDC-S L-C

- A/B/C — 触点形式 Contact Arrangment
- L 0.36W / H 0.2W — 线圈功率 Coil Power
- S 密封/Sealed F 防焊剂/Flux proofed — 封装形式 Construction
- 3/5/6/9/12/18/24VDC — 线圈电压 Coil Voltage
- 型 号 Model

触点参数 / CONTACT PARAMETERS

触点形式	Contact arrangment	A, B, C
接触电阻	Contact resistance	≤50mΩ (1A 6VDC)
触点材质	Contact material	银合金/Silver alloy: $AgSnO_2In_2O_3$、$AgSnO_2$、AgNi
触点负载(阻性)	Contact rating(Res. load)	3A 250VAC/30VDC, 1A 120VAC
最大切换电压	Max switching voltage	250VAC/30VDC
最大切换电流	Max switching current	5A
最大切换功率	Max switching power	750VA/90W
电耐久性 (频率:每小时360次)	Electrical endurance (Frequency:360 ops/h)	$1x10^5$ops / $1x10^4$ops
机械耐久性 (频率:每小时18000次)	Mechanical endurance (Frequency:18000 ops/h)	$1x10^7$ops

超小型信号继电器
Subminiature Signal Relay

1A/3A

特性参数 / CHARACTERISTICS PARAMETERS

绝缘等级	Insulation level		B/F
绝缘电阻	Insulation resistance		100MΩ(500VDC)
介质耐压 (漏电流 1mA)	Dielectric strength (Leakage current 1mA)	线圈与触点间 Between coil and contacts	1000VAC 1min
		断开触点间 Between open contacts	500VAC 1min
吸合时间(额定电压下)	Operate time(at nominal voltage)		≤5ms
释放时间(额定电压下)	Release time (without diode) (at nominal voltage)		≤5ms
湿度	Humidity		5% ~ 85% RH
环境温度(℃)	Ambient temperature		-40℃ ~ +85℃
抗冲击	Shock resistance	稳定性/Functional	147m/s²
		强度/Destructive	980m/s²
抗振动(双振幅)	Vibration resistance (Double amplitude)		10Hz~55Hz 2.5mm
重量	Weight		约/Approx 3.8g
封装形式	Construction		密封/Sealed 防焊剂/Flux proofed

备注: 以上数据均为初始值
Remark: All above data is initial value

线圈参数 / COIL PARAMETERS

常温/At (23℃)

功耗(W)	Power consumption(W)	0.36W(L)							0.2W(H)						
额定电压(VDC)	Nominal voltage(VDC)	03	05	06	09	12	18	24	03	05	06	09	12	18	24
线圈电阻(Ω±10%)	Coil resistance(Ω±10%)	25	69.4	100	225	400	900	1600	45	125	180	405	720	1620	2880
吸合电压(Max)	Pick-up voltage(Max)	75% 额定电压(Nominal voltage)													
释放电压(Min)	Drop-out voltage(Min)	5% 额定电压(Nominal voltage)													
允许最大电压(VDC)	Max allowable overdrive voltage(VDC)	130% 额定电压(Nominal voltage)													

安全认证(相关认证以第三方认证证书为准) / SAFETY APPROVAL RATINGS

CQC	R50056114	E167996
	1A 250VAC 3A 250VAC	1A 120VAC

超小型信号继电器
Subminiature Signal Relay

1A/3A

外形图 / OUTLINE DIMENSIONS

单位/Unit(mm)

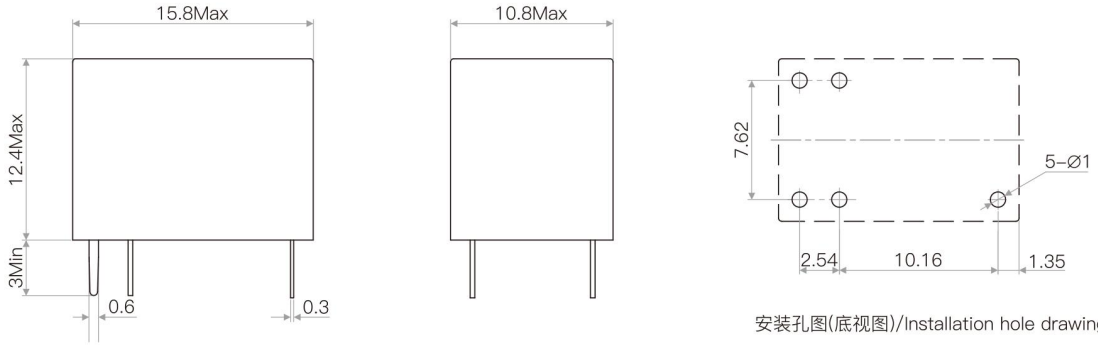

安装孔图(底视图)/Installation hole drawing(Bottom view)

未注公差/Tolerance:±0.1

线路图(底视图) / WIRING DIAGRAM (BOTTOM VIEW)

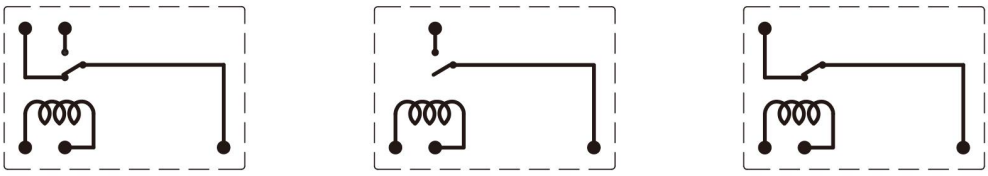

转换C型/Conversion C type　　常开A型/Normally open A type　　常闭B型/Normally closed B type

性能曲线图 / CHARACTERISTIC CURVES

最大切换功率
Maximum switching power

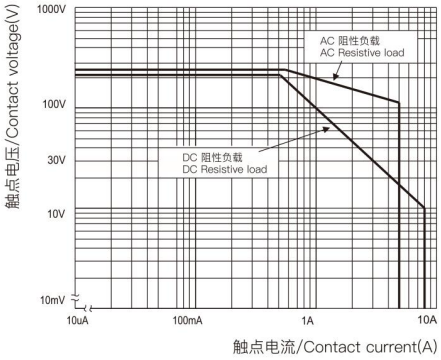

电耐久性曲线
Electrical endurance curve

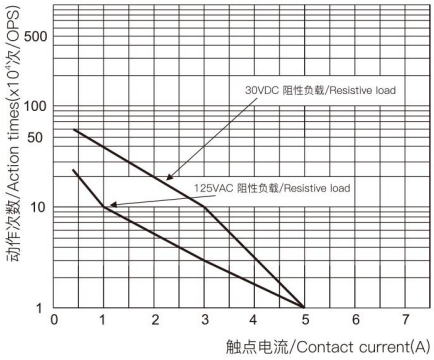

测试条件: NO: AgNi，阻性负载，85℃, 1s通9s断

Test conditions: NO: AgNi, Resistive load, 85°C, 1s on 9s off.